Terzaghi, K. (1995). Evaluation of coefficients of subgrade reaction. Geotechnique, Vol. 5, No. 4, 41-50.

EVALUATION OF COEFFICIENTS OF SUBGRADE REACTION

by

KARL TERZAGHI, M.I.C.E., Hon.M.ASCE.

SYNOPSIS

The theories of vertical and horizontal subgrade reaction are based on the simplifying assumptions that the subgrade obeys Hooke's law, and that the subgrade reaction on the base of a rigid centrally loaded plate resting on the horizontal surface of the subgrade has the same value at every point of the base. Although these assumptions are not rigorously correct, the theories of subgrade reaction can be used for obtaining approximate solutions of many practical problems, such as the computation of the stresses in continuous footings acted upon by concentrated loads, or in piles that are intended to transfer horizontal load on to the subgrade. However, in order to get reasonably accurate results, the coefficients of subgrade reaction must be assigned values compatible with the deformation characteristics of the subgrade and the dimensions of the loaded area.

The Paper contains a discussion of the factors which determine the value of the coefficients of both vertical and horizontal subgrade reaction of cohesionless sand and stiff clay, and numerical values are proposed for the constants which appear in the equations defining these coefficients. It contains also brief reviews of the practical application of the theories of subgrade reaction.

Les théories de réaction verticale et horizontale des soubassement de terrassement sont fondées sur des hypothèses de simplification selon lesquelles la plateforme obéit à la loi de Hooke et que la réaction de soubassement sur la base d'une plaque rigide chargée centralement et reposant sur la surface horizontale de la soubassement a la même valeur en tout point de cette base. Bien que ces hypothèses ne soient pas strictement correctes, les théories sur la réaction de soubassement peuvent être utilisées pour obtenir des solutions approximatives de nombreux problèmes pratiques tels que le calcul des efforts dans des empattements continus sur lesquels agissent des charges concentrées ou dans des pieux qui ont pour but de transférer la charge horizontale sur la soubassement. Toutefois, afin d'obtenir des semelles de fondation raisonnablement précis, les coefficients de réaction de soubassement doivent recevoir des valeurs compatibles avec les caractéristiques de déformation de la soubassement et avec les dimensions de la surface chargée.

Ce document comprend un examen des facteurs déterminant la valeur des coefficients à la fois de réaction verticale et de réaction horizontale de soubassement pour du sable non-cohérent et de l'argile raide. Y figurent en outre des valeurs suggérées pour les constantes apparaissant dans les équations qui définissent ces coefficients. Le Document donne aussi de brefs exposés sur l'application pratique des théories de réaction de soubassement.

NOTATION

A	,,	denotes ratio between modulus of elasticity E_s of cohesionless sand and overburden pressure $p_v = \gamma z$.
B (ft)	,,	width of a surface of contact.
C	,,	constant of integration.
D (ft)	,,	depth, vertical distance.
E (tons ft^{-2})	,,	modulus of elasticity of a beam or slab.
E_s (tons ft^{-2})	,,	modulus of elasticity of cohesionless sand under confining pressure p_v.
H (ft)	,,	thickness of a stratum, length of embedded portion of a pile.
h (ft)	,,	thickness of a beam or a slab.
I (ft^4)	,,	moment of inertia of a beam.
K	,,	coefficient of earth pressure.
K_A	,,	coefficient of active earth pressure.
K_0	,,	coefficient of earth pressure at rest.
K'_0	,,	coefficient of earth pressure corresponding to lateral displacement of wall with height H over distance $y_0 = 0{\cdot}0002H$.
k_2 (tons ft^{-3})	,,	coefficient of subgrade reaction on diaphragm in an earth dam.
k_h (tons ft^{-3})	,,	coefficient of horizontal subgrade reaction.
k_v (tons ft^{-3})	,,	coefficient of vertical subgrade reaction.

k_{s1} (tons ft^{-3})	denotes	basic value of coefficient of vertical subgrade reaction (value of coefficient for square area with width $B = 1$ ft.
L (ft)	,,	length.
$l = L/B$	,,	ratio between length and width of a rectangular area.
l_d (tons ft^{-3})	,,	constant of horizontal subgrade reaction on diaphragm in earth dam with height H value for $z/H = 1$).
l_h (tons ft^{-3})	,,	constant of horizontal subgrade reaction for anchored bulkhead with free earth support, depth of sheet-pile penetration D (value for $z/D = 1$).
M	,,	ratio between settlement of rectangular area with width B ft, on cohesionless sand and that of an area with width of 1 ft, at equal unit load.
M_{max} (tons ft)	,,	maximum bending moment in a beam or slab.
m_h (tons ft^{-4})	,,	ratio between coefficient of horizontal subgrade reaction and depth below surface.
N	,,	dimensionless quantity.
n_h (tons ft^{-3})	,,	constant of horizontal subgrade reaction on narrow, vertical, or horizontal strips (value for $z/B = 1$).
p (tons ft^{-2})	,,	increase of contact pressure due to displacement y.
p_a (tons ft^{-2})	,,	contact pressure on area acted upon by active earth pressure.
p_0 (tons ft^{-2})	,,	contact pressure corresponding to earth pressure at rest on vertical face.
p'_0 (tons ft^{-2})	,,	contact pressure on vertical face with height H, corresponding to horizontal displacement $y_0 = 0{\cdot}0002H$.
p_p (tons ft^{-2})	,,	$p'^0 + p$ = contact pressure on vertical surface.
p_v (tons ft^{-2})	,,	γz = effective overburden pressure.
Q (tons)	,,	concentrated load.
R (ft)	,,	radius of equivalent circular footing.
r_0 (ft)	,,	radius of stiffness of a concrete mat.
y (ft)	,,	displacement.
y_0 (ft)	,,	initial displacement, required for increasing the coefficient of earth pressure on a vertical wall from K_0 to K'_0.
z (ft)	,,	depth below ground surface or dredge line.
γ (tons ft^{-3})	,,	effective unit weight of sand.
μ	,,	Poisson's ratio for concrete.

INTRODUCTION

The term *subgrade reaction* indicates the pressure p per unit of area of the surface of contact between a loaded beam or slab and the subgrade on which it rests and on to which it transfers the loads. The *coefficient of subgrade reaction* k_s is the ratio between this pressure at any given point of the surface of contact and the settlement y produced by the load application at that point :

Scott's Ro

$$k_s = \frac{p}{y} \quad . \quad . \quad . \quad . \quad . \quad . \quad . \quad . \quad . \quad . \quad . \quad (1)$$

The value of k_s depends on the elastic properties of the subgrade and on the dimensions of the area acted upon by the subgrade reaction.

The concept of subgrade reaction was introduced into applied mechanics by Winkler (1867), and was used by Zimmermann (1888) for the purpose of computing the stresses in railroad ties which rest on ballast over their full length. During the following decades the theory

was expanded to include the computation of the stresses in flexible foundations, such as continuous footings or rafts and in concrete pavements acted upon by wheel loads. The fundamental principle of the theory is illustrated by Fig. 1, representing a beam with length L, height H, and width B, which rests on the subgrade. At mid-length, it is acted upon by a line-load, q per unit of width. Let:

B = width of the beam,
E = modulus of elasticity of the beam,
$I = \frac{H^3B}{12}$ = moment of inertia of the beam,
S = the vertical shearing force at a distance x from the midpoint of the length of the beam, per unit of width,
p = the subgrade reaction at distance x from the midpoint of the length of the beam, per unit of area,
y = the settlement of the base of the beam at distance x from the midpoint, and
e = the base of natural logarithms.

The rate at which the shearing force S changes with the distance x from the mid-point of the length of the beam is:

$$-\frac{dS}{dx} = p = k_s y \qquad (2)$$

According to the theory of bending of beams:

$$-\frac{dS}{dx} = -E\frac{I}{B}\frac{d^4y}{dx^4}$$

Hence, in accordance with equation (2):

IP $EI\frac{d^4y}{dx^4} = -k_s B\, y$

Scott's k

$$k_s y = -E\frac{I}{B}\frac{d^4y}{dx^4} \qquad (3)$$

A solution of this well-known equation is:

$$y = C_1 \cosh\psi \cos\psi + C_2 \sinh\psi \sin\psi + C_3 \cosh\psi \sin\psi + C_4 \sinh\psi \cos\psi$$

wherein:

$$\psi = x\sqrt[4]{\frac{Bk_s}{4EI}}$$ Scott's k.

is a pure number and C_1 to C_4 are constants of integration. The value of these constants is determined by the boundary and continuity conditions. For the simple case illustrated by Fig. 1, the computation furnishes for the value M_{max} of the bending moment in the beam the equation:

$$M_{max} = \frac{QL}{4B\psi_1}(1 - D) \qquad (4)$$

wherein:

$$D = \frac{\cos\psi_1 + \sin\psi_1 - e^{-\psi_1}}{\sinh\psi_1 + \sin\psi_1}$$

and:

$$\psi_1 = L\sqrt[4]{\frac{Bk_s}{4EI}} \text{ and } Q = q \,.\, B$$

Since about 1920 the theory of subgrade reaction has also been used by several investigators for computing the stresses in piles and sheet-piles which are acted upon by horizontal

forces above the ground surface. In this case, the seats of the subgrade reaction acts in a horizontal direction. Therefore, the ratio between unit pressure and displacement will be referred to as *coefficient of horizontal subgrade reaction* k_h.

If the subgrade consists of cohesionless material, such as clean sand, the unit pressure p on a vertical face, required to produce a given horizontal displacement y increases approximately in simple proportion to depth z, whence :

$$k_h = \frac{p}{y} = m_h z \qquad (5)$$

In this equation m_h is a factor, the value of which depends on the relative density of the sand and the dimensions of the area acted upon by the subgrade reaction. If the value k_h, equation (5), is introduced into equation (3), the equation :

$$m_h z y = -E\frac{I}{B}\frac{d^4y}{dx^4} \qquad (6)$$

is obtained.

In any event the application of the theory of subgrade reaction to the computation of the bending moments in flexible beams, slabs or piles leads to a differential equation of the fourth order, and the solution of such an equation is beyond the capacity of the average practising engineer. This fact led to the following peculiar situation. Most of the Papers dealing with problems of subgrade reaction have been written by investigators who are primarily interested in the theoretical aspects of the problem. They published the solution of the differential equation, taking it for granted that the value of the coefficient of subgrade reaction, k_s or k_h, be known. Hayashi (1921), in his comprehensive treatise on the subject, notified the reader that the value of k_s should be determined by a loading test, but he did not mention the fact that the results of a loading test depend on the size of the loaded area. The book by Hetényi (1946) on beams on elastic foundations does not contain any statement regarding the factors which determine the numerical value of the coefficient of subgrade reaction.

This condition led to the erroneous conception, widespread among engineers, that the numerical value of the coefficient of subgrade reaction depends exclusively on the nature of the subgrade. In other words, it became customary to assume that this coefficient has a definite value for any given subgrade. Half a century ago Engesser (1893) pointed out that the value k_s in equation (1) decreases with increasing width B of the beam, Fig. 1, approximately in accordance with the equation :

$$k_s = a + \frac{b}{B}$$

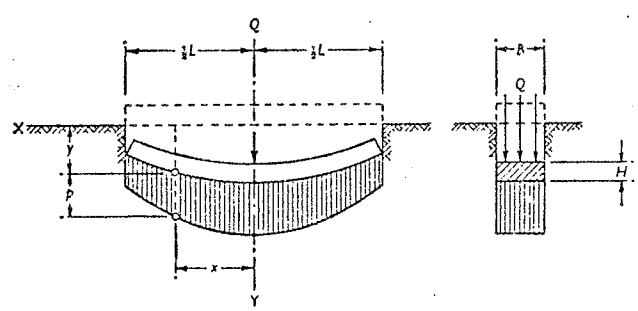

Fig. 1. Flexible beam acted upon at mid-length by load Q

wherein a and b are empirical constants. Terzaghi (1932*b*) published a Paper which dealt with the factors that determined the value of k_s for flexible raft foundations, acted upon by line loads. Yet these Papers received little attention, and even in recent years Papers were published in which most unrealistic values were assigned to the coefficients of subgrade reaction. The results obtained on the basis of such values can be very misleading. It is hoped that this Paper will assist in remedying the situation.

The Paper deals with the factors which determine the numerical value of the coefficients of vertical and horizontal subgrade reaction for sand and stiff clay under simple and frequently encountered conditions. It also contains a description of the procedures by means of which reasonable values for the coefficients of vertical and horizontal subgrade reaction can be secured. It will be concluded by a brief discussion of the errors due to the simplifying assumptions on which the theories of subgrade reaction are based and of the means for reducing the errors.

FACTORS DETERMINING THE VALUES OF k_s AND k_h

Fundamental assumptions

The theories of subgrade reaction are based on the following simplifying assumptions :

(A) The ratio k between the contact pressure p and the corresponding displacement y is independent of the pressure p.

(B) The coefficient of vertical subgrade reaction k_s has the same value for every point of the surface acted upon by the contact pressure. If the subgrade consists of stiff clay, the coefficient of horizontal subgrade reaction also has the same value, k_h, for every point of the surface of contact. For cohesionless subgrades the value of the coefficient of horizontal subgrade reaction is determined by equation (5) :

$$k_h = m_h z \qquad [5]$$

and the value m_h is assumed to be the same for every point of the surface of contact.

The errors contained in these simplifying assumptions are discussed on pp. 322–325 of this Paper.

Horizontal beams

If a flexible beam, Fig. 2(a), acted upon by loads Q_1 to Q_n, rests on a compressible subgrade, the settlement y of the beam will be greater at the points of load application than it is between these points. According to assumption (B), equation (1), the ratio between the subgrade reaction p and the corresponding settlement y has the same value at every point :

$$\frac{p}{y} = k_s = \text{constant} \qquad [1]$$

In order to illustrate the influence of the width B of the beam on the value k_s, the concept of the *bulb of pressure* can conveniently be used. The bulb of pressure is arbitrarily defined as the space within which the vertical normal stress in the subgrade is greater than one-fourth of the normal pressure on the surface of load application. The value of one-fourth has been selected because the major portion of the settlement of a loaded plate resting on a fairly homogeneous subgrade is due to the compression and deformation of the soil located within the space defined by this value. Replacing this value by another one, such as one-third or one-sixth, would have no influence on the conclusions, because the concept of the *bulb of pressure* merely serves the purpose of assisting the reader to visualize the stress conditions in the loaded subgrade.

Fig. 2(b) shows the bulb of pressure for a beam with width B_1 and Fig. 2(c) that for a beam with width nB_1. The depth of these bulbs is D and nD, respectively. The influence of the

depth of the bulb on the settlement of the loaded area depends on the deformation characteristics of the subgrade.

If the deformation characteristics are more or less independent of depth, like those of stiff clay, it can be assumed that the settlement y increases in simple proportion to the depth of the bulb of pressure:

$$y_n = ny_1$$

and:

$$k_{sn} = \frac{p}{ny_1} = \frac{p}{y_1}\frac{B_1}{nB_1}$$

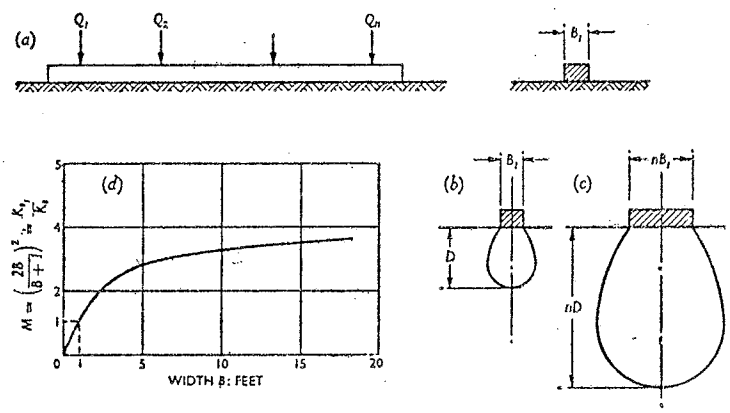

Fig. 2. (a) Flexible beam acted upon by loads Q_1 to Q_n; (b) and (c) influence of width of beam on depth of bulbs of pressure; (d) influence of width of beam on value K_{s_1}/K_s for beams on sand

Substituting $k_{sn} = k_s$, $B_1 = 1$ ft, $nB_1 = B$ and $p/y_1 = k_{s1}$, the equation:

$$k_s = k_{s1}\frac{1}{B} \quad . \quad . \quad . \quad . \quad . \quad . \quad . \quad . \quad . \quad . \quad . \quad (7)$$

is obtained, where k_{s1} is the coefficient of vertical subgrade reaction for a beam with a width of 1 ft, resting on stiff clay. The settlement y_1 for the beam increases with time on account of progressive consolidation of the clay under load, whereby k_{s1} decreases and, like y_1, approaches an ultimate value. In this Paper the symbol k_s always indicates the ultimate value.

If the beams rest on clean sand, the settlement y assumes almost instantaneously its ultimate value, but the deformation characteristics of the sand are a function of depth, because the modulus of elasticity of sand* increases with increasing depth (Terzaghi 1932*a*). On account of this fact the lower portion of the bulb of pressure of a beam with width nB resting on sand is much less compressible than that of the bulb of a beam with width B resting on the same sand, and the settlement y_n of the wider beam has a value intermediate between y and ny:

$$\frac{y_n}{y} = f(n) < n.$$

* Ratio between increase of deviator stress and corresponding increase of linear strain at unaltered confining pressure.

Experimental investigations have shown that :

$$\frac{y}{y_1} = \left(\frac{2B}{B+1}\right)^2 = M \quad . \quad . \quad . \quad . \quad . \quad . \quad . \quad . \quad . \quad . \quad (8a)$$

wherein y_1 is the settlement of a beam with a width of 1 ft at a given pressure p per unit of area of contact and y the settlement of a beam with a width B (feet) at equal contact pressure (Terzaghi and Peck, 1948). Equation (8a) is represented in Fig. 2(d) by a curve. The abscissas indicate the width of the beam in feet and the ordinates the values of M.

The coefficient of subgrade reaction for a beam with width B is :

$$k_s = \frac{p}{y} = \frac{p}{y_1}\frac{1}{M} = k_{s1}\left(\frac{B+1}{2B}\right)^2 \quad . \quad . \quad . \quad . \quad . \quad . \quad . \quad (8b)$$

wherein k_{s1} is the coefficient of subgrade reaction for a beam with a width of 1 ft.

Concentrated loads on concrete pavements and concrete mats

If a concrete pavement is acted upon by a concentrated load Q such as a wheel load, the settlement Y of the pavement decreases from the point of load application in radial directions, as shown in Fig. 3(a). The problem of computing the bending moments produced by load Q has been solved by Westergaard (1926) by means of the theory of subgrade reaction.

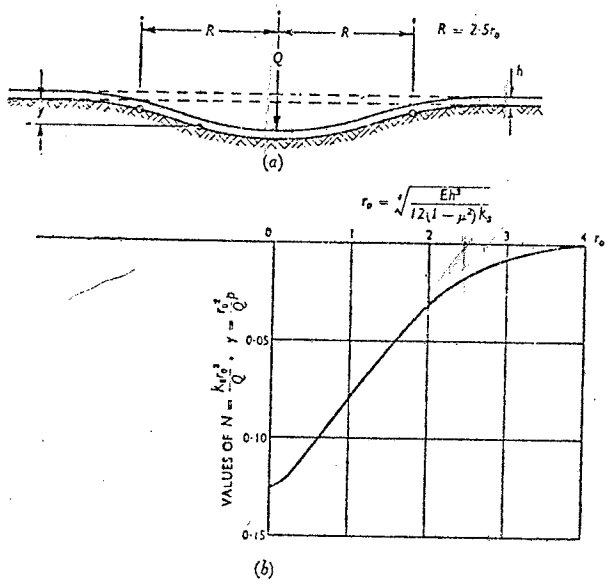

Fig. 3. (*a*) Concrete pavement supporting concentrated load Q ; (*b*) relation between distance r_0 (abscissas) and N, which is proportional to both the vertical deflexion y and the contact pressure p (ordinates)

According to Westergaard's findings the bending moments in the loaded slab and the vertical displacements of the base of the slab are a function of a value :

$$r_0 = \sqrt[4]{\frac{Eh^3}{12(1-\mu^2)k_s}}$$

which is called the *radius of stiffness* of the slab. In this equation E represents the modulus

of elasticity, μ Poisson's ratio of the concrete and h the thickness of the slab. The value μ is roughly equal to 0·15 and r_0 has the dimensions of a length.

In Fig. 3(b) the abscissas represent the radius of stiffness r_0 and the ordinates the quantity:

$$N = \frac{k_s r_0^2}{Q} y = \frac{r_0^2}{Q} p$$

wherein y is the settlement of the base of the slab at any point and p the corresponding contact pressure. Since N is proportional to the contact pressure p, the figure shows that the major portion of the load is transferred on to the subgrade within a distance $2{\cdot}5r_0$ from the point of load application. Beyond this distance the settlement of the base of the slab is very small and the removal of the mat beyond this distance would have little influence on the maximum bending moment in the slab. Therefore, the distance:

$$R = 2{\cdot}5r_0 = \sqrt[4]{\frac{10Eh^3}{3(1-\mu^2)k_s}} \quad . \quad . \quad . \quad . \quad . \quad . \quad . \quad . \quad (9)$$

will be referred to as the *range of influence* of the concentrated load and that portion of the mat which is located within a distance R from the point of load application is the *equivalent circular footing*.

For concrete slabs on sand, R is very roughly equal to seven times the thickness h of the slab. The stress distribution in the subgrade beneath the slab is practically the same as if the load were transferred on to the subgrade by the equivalent footing. Therefore, the coefficient of subgrade reaction is approximately equal to that for the equivalent circular footing, and the diameter of the footing depends on the thickness of the slab.

It has been shown before that the coefficient of subgrade reaction for a spread footing decreases with increasing width of the footing and, as a consequence, with increasing radius of stiffness r_0, whereas Westergaard assumed that k_s is independent of r_0. However, if the value of k_s for a footing covering an area of 1 ft × 1 ft is known, the value of k_s for the slab can be estimated by means of the following indirect procedure.

The range of influence R is assigned an estimated value R_1 equal to seven times the thickness of the slab, and the corresponding coefficient of subgrade reaction k_s is evaluated as shown in the last part of this Paper. This value of k_s is introduced into the equation for R. If the difference between R_1 and R is smaller than about 50% of R_1, the value k_s can be computed on the assumption that R is equal to the greater of the two values. Otherwise the computation should be repeated on the assumption that the range of influence is equal to the value R furnished by the preceding computation. This should be continued until the difference between assumed and computed value of R becomes smaller than 50%.

Fig. 4(a) is a vertical section through a concrete mat covering an area mB by nB on the surface of a deposit of stiff clay. The mat carries concentrated loads Q, such as column loads spaced B both ways. The spacing B is assumed to be greater than twice the range R of influence of the individual loads. If the loads were applied successively, one by one, the distribution of the pressures in the bulb of pressure of the first load and the bending moments in the mat, beneath the load, would remain practically unaltered. Therefore it is assumed that the coefficient of k_s for the mat is equal to that for a circular disk with radius R, (equation (9)) and independent of the number of loads. The average load on each disk is:

$$p = \frac{Q}{R^2\pi}$$

and the average settlement of the disk is:

$$y = \frac{p}{k_s}$$

which is independent of the dimensions of the mat.

In reality th
of the mat and,
fact that each
base of all the o
pressure is alm
pressure, has li
points between
existence of the
ever, the theory
shaped deform
individual bull
discussed unde
assumptions."

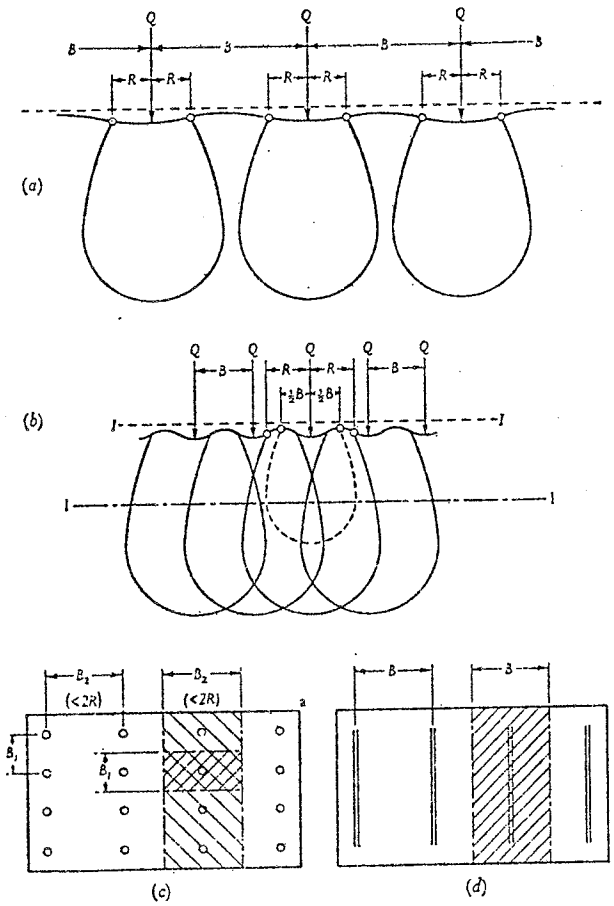

Fig. 4. (*a*) and (*b*) bulbs of pressure beneath concentrated loads Q, equally spaced both ways, acting on rectangular concrete mat; (*c*) concentrated loads, and (*d*) line loads acting on mat foundation

In reality the application of each new load on to the mat increases the average settlement of the mat and, as a consequence, that of each point of load application. This is due to the fact that each new load increases the pressure on the subgrade located below the level of the base of all the other bulbs of pressure. At the level of the base of the bulbs this supplementary pressure is almost uniformly distributed. The supplementary settlement, due to such a pressure, has little influence on the bending moments in the raft beneath and at the mid-points between the individual loads. Therefore, in the theory of subgrade reaction the existence of these pressures and of the corresponding settlement is commonly ignored. However, the theory of elasticity as well as experience indicate that the pressures produce a dish-shaped deformation of the entire raft, superimposed on the deformations associated with the individual bulbs of pressure, shown in Fig. 4(a). The errors resulting from this fact are discussed under the heading, "Corrections for the errors involved in the fundamental assumptions."

If the spacing B between the loads Q is reduced to values smaller than $2R$, the bulbs of pressure, with a top diameter $2R$, overlap, as shown in Fig. 4(b). As a consequence the level I—I, at which the distribution of the pressure due to the loads becomes practically uniform, is located high above the bottom of the bulbs. According to the basic assumptions of the theory of subgrade reaction the compression of the subgrade located below this level has no influence on the deformation of the raft. Therefore, it seems reasonable to compute the coefficient of subgrade reaction k_s on the assumption that the range of influence of each load is $\frac{B}{2}$ and not R. The corresponding bulb of pressure is indicated in Fig. 4(b) below one of the loads by a dash line.

It has already been shown that the real settlement of the mat is much greater than the settlement computed by means of k_s. It multiplies with increasing overall dimensions of the concrete mat, and is associated with a dish-shaped deformation of the mat superimposed on the deformations produced by the individual loads, in accordance with the theory of subgrade reaction. The bending moments produced by the unequal compression of the subgrade between the level I—I (Fig. 4(b)) and the base of the mat will be referred to as the *local* bending moments and those due to the compression of the subgrade below the plane I—I as the *general* bending moments. The theory of subgrade reaction furnishes only the values of the local bending moments.

If the spacing of the loads is very different in two different directions, as shown in Fig. 4(c), the range of influence of the loads is also different in the two principal directions. Therefore, two different values must be assigned to the coefficient of subgrade reaction. For the computation of the local bending moments in vertical planes interconnecting the closely spaced columns, a lower limiting value of k_s can be obtained on the assumption that the effective area of contact is a rectangle with width B_1 and length B_2 (cross-shaded area in Fig. 4(c)). For computing the local bending moments in vertical planes through the widely spaced columns (spacing B_2), the value of k_s should be selected on the assumption that the effective area of contact is a strip with width B_2 (shaded area in Fig. 4(c)).* If the loads are transmitted on to the mat by a set of parallel walls spaced B, Fig. 4(d), k_s should be estimated on the assumption that the effective contact area is a strip with width B (shaded area), or with width $2R$, whichever is smaller.

In connexion with these simplifying assumptions it should be remembered that it is sufficient, for practical purposes, to know the order of magnitude of the coefficient of subgrade reaction k_s. The errors in the evaluation of the stresses in the mat due to an error of $\pm 50\%$ in the evaluation of k_s are negligible. The real difficulties reside in the computation of the stresses, as shown below.

Practical applications of the theory of vertical subgrade reaction

The most common practical application of the theory of vertical subgrade reaction is the computation of the distribution of the contact pressures over the base of rigid footings or mats. The results of the computation are independent of the numerical value of the coefficient of subgrade reaction, but due to the simplifying assumptions involved in the theory, the difference between the computed and the real pressure distribution can be important. It is discussed in pp. 322-325 of this Paper.

The theory is also used for estimating the bending moments in continuous footings supporting rows of columns or heavy, movable concentrated loads, such as the wheel loads of ore bridges and cranes, in the concrete floor of shipways or locks and in "rigid" pavements acted upon by concentrated loads. The solution of the equations which determine the local

* If B_2 is greater than $2R$ (equation (9)), B_2 should be replaced by $2R$.

bending moments in
and various other pu
The most difficult
are not equally space
some operation even
mat is flexible, an acc
Therefore, the follow
The raft is first d
the base of the raft i
estimated which wou
influence of these fict
the raft. If the infl
portant, a modificati
important, either on
unchanged, but the r
the difference betwe
nexion with this ope
smaller than those w
soil reactions on the l
the areas located bet
redesigned on the bas
find out whether or r
reduces the stresses t
problem is an indire

Vertical piles acted u

Fig. 5 represents
into the subgrade.
contact between pil
pressure p_0 which is
pressure (driven pile

(a)

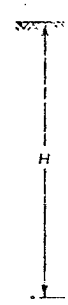

Fig. 5
(c)

bending moments in most of these structures can be found in the book by Hayashi (1921) and various other publications.

The most difficult problem is the design of flexible mats acted upon by column loads which are not equally spaced. The computation of the bending moments in such mats is a cumbersome operation even on the simplifying assumption that the mat is perfectly rigid. If the mat is flexible, an accurate computation of the local bending moments is almost impracticable. Therefore, the following procedure is indicated.

The raft is first designed on the assumption that the distribution of the soil reactions on the base of the raft is identical with that on the base of a rigid raft, and the deflexions are estimated which would be produced by these reactions. The next step is to ascertain the influence of these fictitious deflexions on the distribution of the soil reactions over the base of the raft. If the influence of the deflexions on the pressure distribution is found to be unimportant, a modification of the design is unwarranted. On the other hand, if the difference is important, either one of two procedures may be used. The thickness of the raft is left unchanged, but the reinforcement is reduced on the basis of the results of a rough estimate of the difference between the bending moments in the rigid and in the flexible raft. In connexion with this operation it must be considered that the real deflexions of the raft will be smaller than those which have been computed on aforementioned assumptions, because the soil reactions on the base of a flexible raft decrease from the points of load application towards the areas located between these points. As an alternative procedure the rigid raft could be redesigned on the basis of higher stresses in concrete and steel, and an estimate is then made to find out whether or not the influence of the flexibility of the raft on the pressure distribution reduces the stresses to values close to the allowable ones. In any event the approach to the problem is an indirect one.

Vertical piles acted upon by horizontal loads

Fig. 5 represents vertical beams with width B_1 which are buried in or have been driven into the subgrade. Before any horizontal forces have been applied to the piles, the surfaces of contact between piles and subgrade are acted upon at any depth z below the surface by a pressure p_0 which is equal to the earth pressure at rest (buried piles) or greater than this pressure (driven piles).

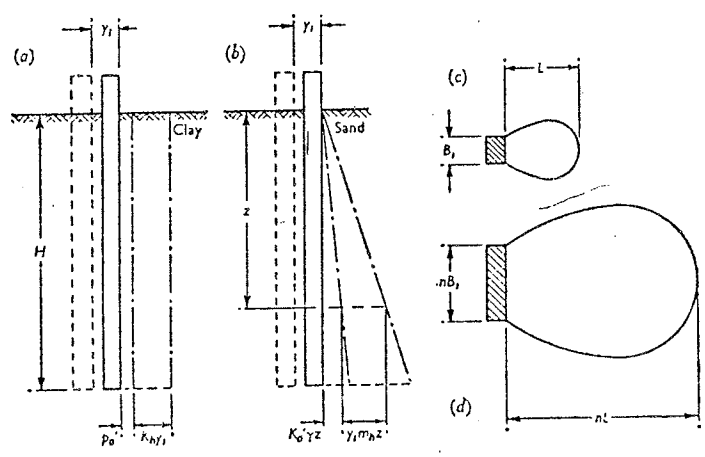

Fig. 5. Vertical beam embedded (*a*) in stiff clay, and (*b*) in sand; (*c*) influence of width of beam on dimensions of bulb of pressure

If the pile is moved to the right, at right angles to its width B_1, the pressure on the left-hand face of the pile drops down to a very small value. On account of arch action comparable to that above a yielding trap door, this value is smaller than the active earth pressure, and can therefore be disregarded. At the same time, and as the result of the same displacement, the pressure p_p on the right-hand face increases from its initial value p_0 to a value p'_0 which is somewhat greater than the earth pressure at rest, p_0. The lateral displacement y_0 required to produce this change is so small that it can be disregarded. Hence, at the outset of the movement of the pile towards the right, $y_1 = 0$ and the pressures on the two faces of the piles are, at any depth z:

$$p_a = 0 \text{ (left-hand side)}$$

and

$$p_p = p'_0 > p_0 \text{ (right-hand side).}$$

After the pile has moved through a distance y_1 to the right,

$$p_a = 0 \text{ (left-hand side),}$$

and

$$p_p = p'_0 + p = p'_0 + k_h y_1 \text{ (right-hand side)} \quad . \quad . \quad (10)$$

wherein $p = k_h y_1$ is the increase of the pressure on the right-hand face due to the displacement y_1 of the pile.

The value of k_h and the change of k_h with depth depend on the deformation characteristics of the subgrade.

The deformation characteristics of stiff clay are more or less independent of depth. Therefore, at any time, the subgrade reaction p is almost uniformly distributed over the right-hand face of the pile shown in Fig. 5(a) and the coefficient of subgrade reaction is:

$$k_h = \frac{p}{y_1}$$

However, on account of the progressive consolidation of clay under constant load the value y_1 increases and the value k_h decreases with time, and both approach ultimate values. In connexion with design the ultimate value of k_h must be used.

In cohesionless sand, the values y_1 and k_h are practically independent of time. However, the modulus of elasticity of the sand increases approximately in simple proportion to depth. Therefore, it can be assumed without serious error that the pressure p required to produce a given horizontal displacement y_1 increases in direct proportion to depth z as shown in Fig. 5(b) and:

$$k_h = \frac{p}{y_1} = m_h z$$

Fig. 5(c) shows the bulb of pressure for the beam with width B_1 and Fig. 5(d) that for a beam with width nB_1. The lengths of these bulbs, measured in the direction of the movement of the pile, are L and nL respectively. Furthermore, in both clay and sand the modulus of elasticity is constant in horizontal directions. Hence in clay, as well as in sand, the horizontal displacement y increases in simple proportion to the width B_1, $y_n = ny_1$.

For beams surrounded by clay:

$$k_{hn} = \frac{p}{y_n} = \frac{p}{ny_1} = \frac{p}{y_1}\frac{B_1}{nB_1}$$

substituting $k_{hn} = k_h$, $B_1 = 1$ ft, $nB_1 = B$ and $p/y_1 = k_{h1}$ in this equation, we obtain:

$$k_h = \frac{p}{y_1}\frac{1}{B} = \frac{1}{B}k_{h1} \quad . \quad . \quad . \quad . \quad . \quad . \quad . \quad . \quad . \quad . \quad (11)$$

wherein k_{h1} is the coefficient of horizontal subgrade reaction for a vertical beam, with a width of 1 ft, embedded in clay.

If the pile is embedded in sand:

$$k_{hn} = m_{hn}z = \frac{p}{y_n} = \frac{p}{ny_1}$$

Since

$$\frac{p}{y_1} = m_{h1}z,$$

$$k_{hn} = \frac{1}{n}\, m_{h1}z = m_{h1}B_1\,\frac{z}{nB_1}$$

substituting $k_{hn} = k_h$, $B_1 = 1$ ft, $nB_1 = B$ and $m_{h1}B_1 = n_h$,

$$k_h = n_h\frac{z}{B} \quad . \quad . \quad . \quad . \quad . \quad . \quad . \quad . \quad . \quad . \quad . \quad (12)$$

wherein n_h (tons ft^{-3}) is the *constant of horizontal subgrade reaction* for piles embedded in sand.

For vertical piles or beams embedded in the subgrade, the pressure p in equation (9) can assume values which are many times greater than p'_0. Hence it is commonly assumed that $p'_0 = 0$, whence:

$$p_p = p = k_h y \quad . \quad . \quad . \quad . \quad . \quad . \quad . \quad . \quad . \quad . \quad . \quad (13)$$

Anchored bulkheads, free earth support

If the depth D_1 of penetration of the sheet piles forming the anchored bulkhead shown in Fig. 6(a) is relatively small and the flexural rigidity of the sheet piles is great, the earth pressure acting on the inner face of the bulkhead causes the entire buried portion of the sheet piles to yield in an outward direction, and produces a horizontal subgrade reaction on the entire outer face of the buried portion of the sheet piles.

Before the sheet piles move, both faces of the piles are acted upon at any depth z by a pressure p_0 which is approximately equal to the earth pressure at rest. However, a very slight horizontal displacement y_0 towards the right reduces the earth pressure on the left-hand face to the active earth pressure p_a, whereas the pressure on the right-hand face assumes a value p'_0 which is greater than the earth pressure at rest, p_0. Since y_0 is very small compared to the displacements required to increase the contact pressure p_p on the right-hand side of the sheet piles to values which are considerably greater than p'_0, it is assumed that $y_0 = 0$. In the following discussions the symbol p indicates the difference between the total pressure p_p on the left-hand face and the pressure p'_0:

$$p = p_p - p'_0$$

In order to evaluate the coefficient of subgrade reaction k_h for the buried portion of the sheet piles, the sheet piles are advanced over a distance y_1 in an outward direction, parallel to their original position, as shown in Fig. 6(a).

If the subgrade consists of stiff clay, the value p'_0 at any depth z below the dredge line can be assumed to be equal to the effective overburden pressure γz at that depth,

$$p'_0 = \gamma z$$

wherein γ is the effective unit weight of the clay. The error involved in this assumption is on the safe side. The lateral displacement y_1 required to increase the contact pressure on the

right-hand face of the sheet piles by p from p'_0 to p_p increases in simple proportion to the depth of sheet pile penetration D_1 and $y_n = ny_1$, whence :

$$k_{hn} = \frac{k_h}{n} = k_h D_1 \frac{1}{nD_1}$$

Substituting $D_1 = 1$ ft, $nD_1 = D$, $k_h = k_{h1}$, and $k_{hn} = k_h$,

$$k_h = k_{h1} \frac{1}{D} \quad . \quad . \quad . \quad . \quad . \quad . \quad . \quad . \quad . \quad . \quad (14)$$

wherein k_{h1} is the coefficient of horizontal subgrade reaction for a depth of sheet pile penetration of one foot into stiff clay.

If the subgrade consists of cohesionless sand the subgrade reaction produced by a movement of the sheet piles through a horizontal distance y_1 increases approximately in simple proportion to depth as indicated by the triangle a b c in Fig. 6(a) and the coefficient of subgrade reaction is :

$$k_h = \frac{p}{y_1} = m_h z \quad . \quad . \quad . \quad . \quad . \quad . \quad . \quad . \quad . \quad . \quad [5]$$

Let γ = the effective unit weight of the sand located below the dredge line,
z = depth below the dredge line,
K_a = coefficient of active earth pressure,
K_0 = coefficient of earth pressure at rest, and
K_p = coefficient of passive earth pressure.

An imperceptible movement y_0 of the buried portion of the sheet piles reduces the pressure on the left-hand face of the sheet piles to a value equal or close to the active earth pressure $K_a\gamma z$, whereas the pressure on the right-hand side increases to :

$$p'_0 = K'_0\gamma z$$

which is greater than the earth pressure at rest, $K_0\gamma z$. The value y_0 is of the order of magnitude of $D \times 10^{-4}$ (see Fig. 7, Terzaghi 1934) and can be disregarded. Hence, after the sheet piles have moved through a distance y_1 to the right, the unit pressure on the right-hand face of the sheet piles, at depth z is :

$$p_p = K'_0\gamma z + m_h z y_1 \quad . \quad . \quad . \quad . \quad . \quad . \quad . \quad . \quad . \quad . \quad (15)$$

In order to get some information concerning the influence of the depth D_1 of sheet pile penetration on the value m_h in equation (15) it is assumed that the outward movement of the sheet piles shown in Fig. 6(a) has increased the contact pressure at any depth z from $K'_0\gamma z$ to $K_1\gamma z$. The corresponding bulb of pressure, with width L, is shown in Fig. 6(b).

If the contact pressure on sheet piles with depth nD_1 is increased, at any depth, from $K'_0\gamma z$ to $K_1\gamma z$, the corresponding bulb of pressure, shown in Fig. 6(c) has a width nL. The modulus of elasticity of the sand does not change in horizontal directions. Hence the horizontal displacement required to establish the contact pressure $K_1\gamma z$ increases in simple proportion to the depth of sheet-pile penetration :

$$y_n = ny_1$$

According to this reasoning, the lateral displacement y_p required to mobilize the full passive resistance of a mass of sand adjacent to an abutment with a vertical contact face with height D_1 should increase with increasing height of the face. The validity of this conclusion is obvious.

Since y increases in simple proportion to D_1, the coefficient of horizontal subgrade reaction k_{hn} for the bulkhead with a sheet pile penetration nD_1 is :

$$k_{hn} = \frac{p}{ny_1} = \frac{m_{h1}}{n} z = m_{h1} D_1 \cdot \frac{z}{nD_1}$$

If D_1 is assigned a value equal to one foot, $nD_1 = D$, and :

$$m_{h1}D_1 = m_{h1}\ (\text{tons ft}^{-4}) \times \text{unit length} = l_h\ (\text{tons ft}^{-3}),$$

the value of the coefficient of subgrade reaction k_h for sheet piles with any depth D of penetration becomes equal to :

$$k_h = l_h \frac{z}{D} \quad . \quad . \quad . \quad . \quad . \quad . \quad . \quad . \quad . \quad . \quad . \quad (16)$$

The value of the coefficient l_h in this equation depends only on the relative density of the sand in contact with the sheet piles.

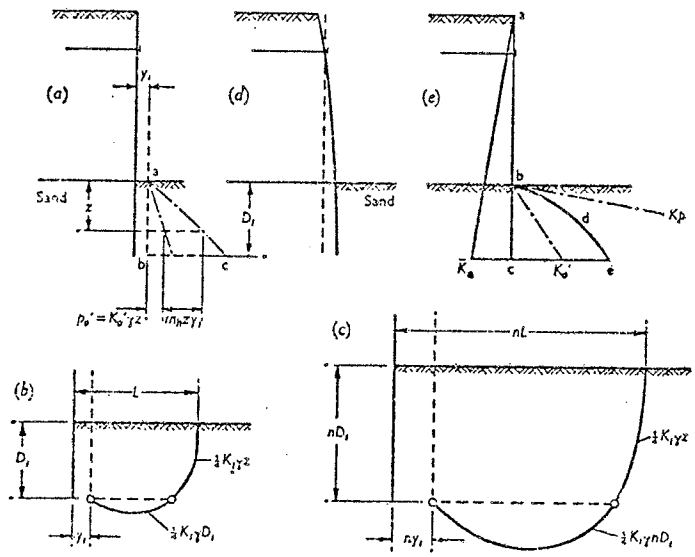

Fig. 6. *(a)* **Pressure distribution on bulkhead if buried portion advances parallel to its original position ;** *(b)* **and** *(c)* **influence of depth of penetration on dimensions of bulb of pressure ;** *(d)* **real displacement of anchored bulkhead with free earth support, and** *(e)* **corresponding pressure distribution**

Fig. 6(d) shows the deflexion of an anchored bulkhead with free earth support and Fig. 6(e) the distribution of the pressures on the two faces of the sheet-pile wall. The left-hand face is acted upon by the active earth pressure, represented by the abscissas of line a $\overline{K}_a$. The outward movement of the buried part of the sheet piles is resisted by the soil reaction represented by the area b c e d in Fig. 6(e). The abscissas of line b K'_0 are equal to the values $K'_0\gamma z$ in equation (15). The lateral displacement required to mobilize horizontal soil reactions of less than $K'_0\gamma z$ are negligible, whereas the displacements produced by pressures in excess of $K'_0\gamma z$ are determined by equation (16).

Anchored bulkheads with fixed earth support

Fig. 7(a) shows the deflexions of an anchored bulkhead with fixed earth support. The bulkhead is assumed to be backfilled with sand and the sheet piles were driven into sand. The earth pressures which act on the two sides of the row of sheet piles are indicated in Fig. 7(b). Between the surface of the backfill and a certain depth below the dredge line the

left-hand face is acted upon by the active earth pressure represented by the abscissas of the straight line a $\overline{K}_a$. The pressure on the right-hand face is given by the abscissas of the curve b d e f, which intersects the straight line b K'_0 in point e at depth z_1. At any depth smaller than z_1 the lateral displacement y of the pile is :

$$y = \frac{K'_0 \gamma z}{l'_h \frac{z}{D}} + \frac{p_p - K'_0 \gamma z}{l_h \frac{z}{D}} \quad . \quad . \quad . \quad . \quad . \quad . \quad . \quad . \quad (17)$$

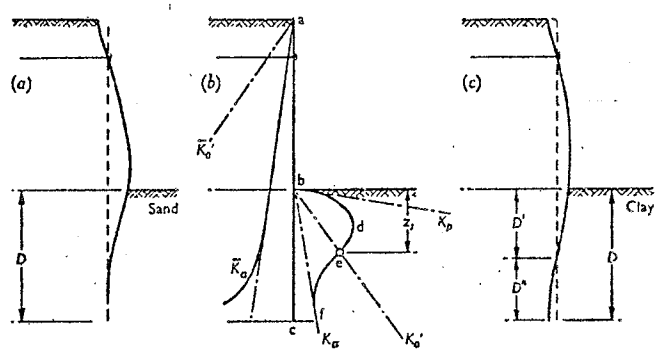

Fig. 7. (a) Deflexion of anchored bulkhead with fixed earth support with sheet piles driven into sand ; and (b) corresponding pressure distribution ; (c) deflexion of bulkhead with sheet piles driven into stiff clay

Below depth z_1 :

$$y = \frac{K'_0 \gamma z}{l'_h \frac{z}{D}}$$

In connexion with vertical piles and beams and with bulkheads with free earth support the displacements produced by pressures smaller than $K'_0 \gamma z$ have been disregarded. In other words, it has been assumed that $l'_h = \infty$. In connexion with bulkheads with fixed earth support this assumption may or may not be indicated, depending on the nature of the investigation.

If the sheet piles are driven into stiff clay, the bulkhead deflects, as shown in Fig. 7(c). Within depth D' the piles deflect outward and the corresponding coefficient of subgrade reaction is obtained by substituting D' for D in equation (14), whence :

$$k_h = k_{h1} \frac{1}{D'}$$

Between depths D' and D the sheet piles deflect to the left. For this range of depth the coefficient of horizontal subgrade reaction is approximately equal to the coefficient of vertical subgrade reaction k_s for a beam with width D'', resting on clay :

$$k_h = k_s = k_{s1} \frac{1}{D''}$$

Flexible diaphragms in earth dams

If an earth dam, Fig. 8, must be made entirely of pervious material, such as clean sand, the flow of water from the reservoir through the dam can be intercepted by an impervious diaphragm, such as a reinforced concrete wall. The upstream face of such a diaphragm is acted upon by both the active sand pressure and the full water pressure. Its downstream displacement is resisted by the passive earth pressure of the downstream section of the embankment.

The deformation of the diaphragm, due to the unbalanced water pressure and the intensity of the shearing forces and bending moments in the diaphragm, depends on the flexural rigidity of the diaphragm and on the coefficient of horizontal subgrade reaction k_d of the downstream portion of the embankment. In order to get at least a crude conception of the factors which determine the value k_d, the diaphragm is assumed to be perfectly rigid. It is further assumed that the surface of the fill material on the downstream side of the diaphragm is horizontal and

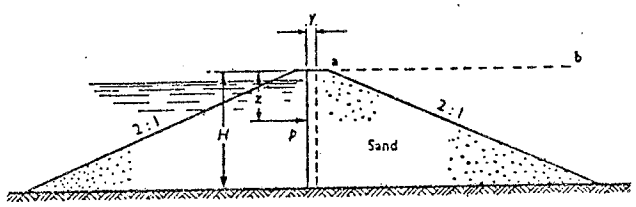

Fig. 8. Fictitious displacement of impervious diaphragm in sand dike, parallel to its original position

located at the elevation of the crest of the dam, as indicated in Fig. 8, by line ab. On these assumptions the value of the coefficient of subgrade reaction is determined by equation (16),

$$k_h = l_h \frac{z}{H} \quad . \quad . \quad . \quad . \quad . \quad . \quad . \quad . \quad . \quad . \quad [16]$$

In reality the surface of the sand on the downstream side of the diaphragm descends at a slope of 2 (horizontal) on 1 (vertical). The passive earth pressure of such a body of sand is roughly equal to 40% of that of a mass of sand with equal height but with a horizontal surface. As a consequence the pressure required to produce a displacement y of the rigid diaphragm hardly exceeds 0·4 times the pressure required to produce the same displacement in an otherwise identical body of sand with a horizontal surface. The corresponding coefficient of subgrade reaction, k'_h, is equal to 0·4 times the value determined by equation (16) :

$$k_d = 0{\cdot}4\, l_h \frac{z}{H} = l_d \frac{z}{H} \quad . \quad . \quad . \quad . \quad . \quad . \quad . \quad . \quad . \quad (18)$$

The value of $l_d = 0{\cdot}4 l_h$ depends only on the physical properties of the downstream section of the dam. At any depth z below the crest of the dam the contact pressure on the downstream face of the diaphragm is :

$$p_p = 0{\cdot}4\, K'_0 + y l_d \frac{z}{H}$$

Practical applications of the theories of horizontal subgrade reaction

Some practical problems can only be solved at a reasonable expenditure of time and labour by means of the theories of horizontal subgrade reaction. These include the computation of

the bending moments in piles which are acted upon by horizontal forces above the ground surface (Cummings, 1937) and of those in core-walls of earth- and rock-fill dams (Löfquist, 1951).

Attempts have also been made to apply the theories to the solution of bulkhead problems (Rifaat, 1935). Baumann (1935) used them for estimating the stresses in an anchored bulkhead which had failed. Quite recently Blum (1951) proposed a procedure for the design of anchored bulkheads by means of the theory of horizontal subgrade reaction. All these investigations and design procedures were based on the tacit assumption that K'_0 in equation (15) is identical with the coefficient of active earth pressure K_a. The error due to this assumption may be quite important.

EVALUATION OF COEFFICIENTS OF SUBGRADE REACTION

General procedure

The numerical values of the coefficients of subgrade reaction k_s and k_h required for the solution of engineering problems can either be estimated on the basis of published observational data or else they can be derived from the results of field tests to be performed on the subgrade of the proposed structure. For practical purposes, rough estimates of these values fully serve their purpose.

Vertical subgrade reaction

As a basis for estimating the coefficient of subgrade reaction k_s for beams and slabs, the value $\bar{k}_{s1}$ for a square plate with a width of 1 ft has been selected, because this value can, if necessary, be determined by averaging the results of several loading tests in the field, at the site of the structure.

If the subgrade consists of cohesionless or slightly cohesive sand, k_s can be estimated on the basis of the empirical values of $\bar{k}_{s1}$ given in Table 1. The density-category of the sand can be ascertained by means of a standard penetration test or other convenient means. The greatest error on the unsafe side results from using the proposed value 130 in the case of medium sand if its real value is equal to the lower limiting value of 60 tons/cu. ft.

Table 1.

Values of $\bar{k}_{s1}$ in tons/cu. ft for square plates, 1 ft × 1 ft, or beams 1 ft wide, resting on sand

Relative density of sand	Loose	Medium	Dense
Dry or moist sand, limiting values for $\bar{k}_{s1}$	20–60	60–300	300–1,000
Dry or moist sand, proposed values	40	130	500
Submerged sand, proposed values	25	80	300

In order to investigate the influence of such an error on the results of the computation of the bending moments in a beam, the maximum bending moment M_{max} in the beam shown in Fig. 1 was computed on the basis of both the assumed and the real value of $\bar{k}_{s1}$ for the supporting sand. The value of M_{max} for this beam is determined by equation (4). It was found that the moment computed by means of the proposed value exceeds the actual bending moment by not more than about 5%.

Once the value $\bar{k}_{s1}$ has been selected, the value of k_s to be used in the solution of a given

problem can be computed by means of the equations derived under the preceding subheadings. Experience has shown that the value k_{s1} for a beam with a width of 1 ft resting on sand is roughly equal to that of a square plate, 1 ft wide. For a beam with a width B feet (Fig. 3) or for a mat acted upon by line loads spaced B feet (Fig. 4(d)), k_s is determined by equation (8):

$$k_s = \bar{k}_{s1} \left(\frac{B+1}{2B}\right)^2 \quad . \quad . \quad . \quad . \quad . \quad . \quad . \quad . \quad . \quad . \quad [8]$$

If applied to spread footings, continuous footings or beams, this equation is valid for contact pressures smaller than one-half of the ultimate bearing capacity of the subgrade per unit of area of the base of the supporting structure. In connexion with slabs or mats, supporting concentrated loads, it is valid, if none of the concentrated loads is greater than one-half of the ultimate bearing capacity of the equivalent circular footing with radius R, equation (9).

Table 2.

Values of $\bar{k}_{s1}$ in tons/cu. ft for square plates, 1 ft × 1 ft and for long strips, 1 ft wide, resting on pre-compressed clay

Consistency of clay	Stiff	Very stiff	Hard
Values of q_u, tons/sq. ft	1–2	2–4	> 4
Range for $\bar{k}_{s1}$, square plates	50–100	100–200	> 200
Proposed values, square plates	75	150	300*

For rectangular plates with width 1ft and length l ft: $k_{s1} = \bar{k}_{s1} \dfrac{l + 0{\cdot}5}{1{\cdot}5l}$

* Higher values should be used only if they were estimated on the basis of adequate test results.

If the subgrade consists of heavily pre-compressed clay, the value of $\bar{k}_{s1}$ increases approximately in simple proportion to the unconfined compressive strength of the clay q_u. On the basis of our present knowledge of the deformation characteristics of precompressed clays the numerical values of $\bar{k}_{s1}$ contained in Table 2 are proposed. These values are valid for contact pressures which are smaller than one half of the ultimate unit bearing capacity of the clay. The latter is independent of the dimensions of the loaded area.

The proposed values of $\bar{k}_{s1}$ for stiff clay are of the same order of magnitude as those for medium sand, Table 1, but the k_s values for clay decrease in inverse proportion to the width of the loaded area, whereas those for sand approach a limiting value equal to 0·25 $\bar{k}_{s1}$. For normally consolidated clays, the values of $\bar{k}_{s1}$ are so small that the bending moments in loaded beams and rafts should be computed on the assumption that the load-supporting structure is perfectly rigid.

The $\bar{k}_{s1}$ values for stiff clay can also be determined by loading tests. However, the results of the tests can be misleading, because the time which is commonly allotted to the performance of such tests is too short to permit complete consolidation of the loaded clay. Furthermore the test results cannot be relied upon unless the loaded block is practically rigid. The height of the block should be at least equal to its width.

If the contact area has the shape of a rectangle with width B and length lB, k_{s1} assumes the value:

$$k_{s1} = \bar{k}_{s1} \frac{l + 0{\cdot}5}{1{\cdot}5l}$$

For $l = \infty$, $k_{s1} = 0{\cdot}67\ \bar{k}_{s1}$. This equation is based on the fact that the deformations of the loaded subgrade below a depth of more than about $3B$ has no significant influence on the

local bending moments. For long beams or continuous footings resting on clay, l can be assumed to be equal to infinity, whence :

$$k_{s1} = \bar{k}_{s1} \cdot \frac{1}{1{\cdot}5B}$$

For concrete mats acted upon by concentrated loads such as column loads the value of k_s is determined by k_{s1} and the dimensions of the areas of effective contact are shown in Fig. 4(c).

Horizontal subgrade reaction on vertical piles and piers

If a vertical pile or pier is surrounded by sand, the coefficient of horizontal subgrade reaction k_h at a given depth z below the surface depends on the width B of the pile measured at right angles to the direction of the displacement, the effective unit weight γ of the sand, and the relative density of the sand. At any depth z below the surface the modulus of elasticity E_s of the sand is roughly equal to :

$$E_s = Ap_v$$

wherein A is a coefficient which depends only on the density of the sand, and p_v is the effective overburden pressure at depth z. If γ is the effective unit weight of the sand, $p_v = \gamma z$ and :

$$E_s = \gamma z A.$$

The coefficient of horizontal subgrade reaction for a vertical beam with width B is determined by the relation between the contact pressure p and the corresponding lateral displacement of the contact face. The displacement is due to the deformation of the adjacent medium with a modulus of elasticity E_s. Displacements beyond a distance of about $3B$ have practically no influence on the local bending moments. Hence the displacement y can be computed on the assumption that the pressure p acts on an elastic layer with thickness $3B$. On this assumption the theory of elasticity (Terzaghi, 1943, p. 424) leads to the equation :

$$p = y\frac{E_s}{1{\cdot}35B} = y\frac{A\gamma}{1{\cdot}35}\frac{z}{B} \quad \ldots\ldots\ldots \quad (19a)$$

whence :

$$k_h = \frac{p}{y} = \frac{A\gamma}{1{\cdot}35}\frac{z}{B} = m_h z = n_h\frac{z}{B} \quad \ldots\ldots \quad (19b)$$

The factor :

$$n_h = \frac{A\gamma}{1{\cdot}35}$$

is identical with n_h in equation (12), which represents the constant of horizontal subgrade reaction for vertical beams or piles.

The value A ranges between about 100 for very loose sand and 2,000 for dense sand. For loose sand the value A is fairly constant for confining pressures up to at least 50 kg/sq. cm. For dense sand it starts to decrease as soon as p_p becomes greater than about 3 kg cm^{-2} (Terzaghi, 1932*a*). The unit weight of dry or moist sand ranges between 1·9 (dense) and 1·3 gm/cu. cm (loose), average :

$$\gamma = 1{\cdot}6 \text{ gm/cu. cm} = 0{\cdot}05 \text{ *tons/cu. ft}$$

and the effective unit weight of submerged sand between 1·2 and 0·8 gm/cu. cm, average :

$$\gamma' = 1{\cdot}0 \text{ gm/cu. cm} = 0{\cdot}03 \text{ tons/cu. ft.}$$

On the basis of these values Table 3 was prepared, containing the values n_h of the constant

* 1 ton = 2,000 lb.

Table 3.

Values of the constant of horizontal subgrade reaction n_h in tons/cu. ft for a pile 1 ft wide, embedded in moist and in submerged sand, and for a horizontal strip, 1 ft wide

Relative density of sand	Loose	Medium	Dense
Range of values of A	100–300	300–1,000	1,000–2,000
Adopted values of A	200	600	1,500
Dry or moist sand, values of n_h	7 2·2	21 6·6	56 17·6
Submerged sand, values of n_h	4 1·25	14 4·4	34 10·7

MN/m³

of horizontal subgrade reaction for a pile with a width of 1 ft, embedded in moist sand and in submerged sand.

For piles embedded in stiff clay, the values for k_{h1} can be assumed to be roughly identical with the values of k_{s1} for beams resting on the horizontal surface of the same clay. Because the horizontal displacement of the contact face between a pile with width of 1 ft is considerably smaller than that of a strip with the same width on the surface of the clay, at equal pressure per unit of area, the error involved in this assumption is on the safe side. The value k_h for a pile with width B in ft is given by the equation :

$$k_h = \frac{1}{B} k_{h1} = \frac{1}{B} \cdot k_{s1} = \frac{1}{1{\cdot}5B} \bar{k}_{s1}$$

The values of $\bar{k}_{s1}$ are given in Table 2.

The value of n_h for piles driven into sand or of k_h for piles embedded in clay can also be determined experimentally. One method consists in driving a very rigid pile, preferably with a square cross-section, into the ground and measuring the tilt and the horizontal displacement of the upper end of the pile produced by a horizontal force acting on the upper end.

According to the second method a steel tube with closed lower end is driven into the ground and a horizontal force is applied to its upper end. The lateral displacement of the centre-line of the tube is then computed for different elevations below the ground surface on the basis of the results of the readings on strain gauges attached to the inner walls of the tube, or of tilt-meter observations. If the lateral displacements are known, the corresponding values of the coefficient of subgrade reaction can be estimated. The strain-gauge method has been used by Loos and Breth (1949). A suitable tilt meter has recently been constructed and successfully employed by S. D. Wilson.*

Figs 9(a) and 9(b) illustrate a test of the first category, to be carried out on a rigid pile with width B driven to a depth D into stiff clay. The displacement y_1 of the upper end of the pile has been measured and the relation between the horizontal subgrade reaction p at any depth z is determined by the equation :

$$p = k_h y = \frac{1}{1{\cdot}5B} \bar{k}_{s1} y_1 \frac{H_2 - z}{H_1 + H_2} \quad . \quad . \quad . \quad . \quad . \quad . \quad . \quad . \quad (20a)$$

In this equation the values $\bar{k}_{s1}$ and H_2 are unknown. They can be computed on the basis of the condition that the sum of all horizontal forces and the sum of all moments about an arbitrarily chosen point must be equal to zero. The distribution of the horizontal pressures over the vertical contact face is shown in Fig. 9(b).

If the pile is embedded in cohesionless sand :

$$p = k_h y = y n_h \frac{z}{B} = y_1 n_h \frac{z}{B} \cdot \frac{H_2 - z}{H_1 + H_2} \quad . \quad . \quad . \quad . \quad . \quad . \quad (20b)$$

*Shannon and Wilson, Consulting Engineers, Seattle, Washington.

The unknown quantities n_h and H_2 can also be determined on the basis of the two conditions for the equilibrium of the pile. However, the computation is somewhat more cumbersome. The distribution of the horizontal pressures is shown in Fig. 9(c)

In any event the computations furnish the value H_2 of the depth at which point a of zero-displacement is located. If the pile is practically rigid, H_2 can also be obtained from the results of an accurate tilt meter and displacement observation on the exposed portion of the pile. If the computation is performed by means of equation (20a) and it is found that H_2 is

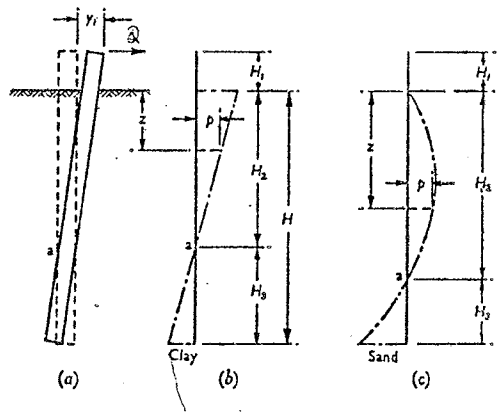

Fig. 9. Diagrams illustrating experimental procedure for determining value of coefficient of subgrade reaction by measuring displacement of upper end of rigid pile acted upon, at upper end, by horizontal force Q

greater than the computed value, it can be concluded that the elastic properties of the subgrade are intermediate between those of a cohesionless sand ($E_s = A\gamma z$) and of a stiff clay ($E_s =$ constant). In such doubtful cases it is indicated to interpret the test results on both assumptions, compute the bending moments on the basis of both results and design on the basis of the more unfavourable findings.

Equations (20a) and (20b) are based on equation (13). This equation was obtained from equation (10) by the simplifying assumption that $p'_0 = 0$. The error due to this assumption decreases with increasing displacement y_1 of the upper end of the test pile. Therefore it is indicated to repeat the test for different values of y_1.

If the horizontal loading tests are made on flexible tubes or piles, the assumption that p'_0 in equation (10) is zero can be eliminated and the values of p'_0 and k_h in this equation can be estimated for any depth if the tube or pile is equipped with fairly closely spaced strain gauges and if, in addition, provisions are made for measuring the deflexions by means of an accurate deflectometer. The strain-gauge readings determine the intensity and distribution of the bending moments over the deflected portion of the tube or the pile, and on the basis of the moment diagram the intensity and distribution of the horizontal loads can be ascertained by an analytical or graphic procedure. The load diagram and the deflexion diagram combined furnish the value of $p'_0 + k_h y_1$ in equation (10), in which p'_0 and k_h are unknown. If the test is repeated for different horizontal loads acting on the upper end of

the pile, a curve can be plotted showing for different depths the relation between p_p and y_1 in equation (10) and this curve is then replaced by a broken line with the equation:

$$p_p = p'_0 + k_h y_1$$

Theoretically the same result could be obtained on the basis of the results of the strain gauge readings alone, because these readings determine the shape of the elastic line. However, the errors involved in the computation of the deflexions are so important that the procedure cannot be recommended.

Anchored bulkheads and flexible diaphragms

The coefficient of horizontal subgrade reaction for the outer face of an anchored bulkhead with free earth support (Fig. 6) in contact with sand is determined by equation (16):

$$k_h = l_h \frac{z}{D}$$

wherein D is the depth of sheet-pile penetration.

The outward movement of the buried portion of the sheet piles is resisted by the passive earth pressure of the sand into which the piles were driven. The few available experimental data (Terzaghi, 1934; Rifaat, 1935) indicate that the lateral displacement increases with increasing contact pressure, as shown in Fig. 10. In this figure the abscissas represent the horizontal displacement and the ordinates the coefficient of lateral earth pressure. This coefficient increases from K'_0 for the initial displacement y_0, which is very small, to the value K_p of the coefficient of passive earth pressure.

In connexion with anchored bulkheads the contact pressure may assume values as high as those corresponding to two-thirds of the coefficient of passive earth pressure K_p. For this range the relationship between contact pressure and displacement y can be represented approximately by the chain-dotted line Oab in Fig. 10. For values of $K = K'_0$, $y = 0$, and for values between K'_0 and 2/3 K_p the contact pressure is determined by equation (16):

$$k_h = l_h \frac{z}{D} \quad . \quad . \quad . \quad . \quad . \quad . \quad . \quad . \quad . \quad . \quad [16]$$

At the present state of our knowledge K_0 for sand can be assigned the following values:

	Loose	Medium	Dense
$K'_0 =$	0·4	0·8	1·2

Table 4.
Values of the subgrade constant l_h in tons/cu. ft for vertical walls, embedded in moist and in submerged sand

Relative density	Loose	Medium	Dense
Dry or moist sand, value of l_h	2·5	8	20
Submerged sand, value of l_h	1·6	5	13

The values of l_h in equation (16) are given in Table 4. They were derived from experimental data presented by Terzaghi (1934) and they are in satisfactory agreement with the results of estimates based on the theory of elasticity. The displacements produced by pressures smaller than $K'_0 \gamma z$ can, as a rule, be disregarded. If a theoretical investigation does not permit this simplification, equation (17) must be used and the value l'_h, which appears in this equation,

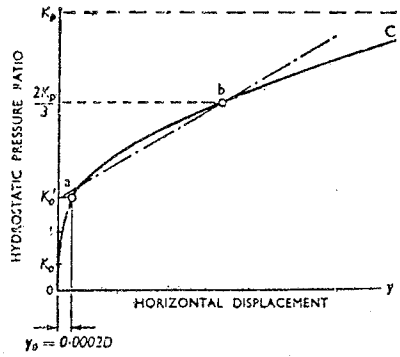

Fig. 10. Curve C = real relationship between horizontal displacement y of vertical wall with height D buried in sand, and coefficient of earth pressure K ; straight lines Oab, the assumed relationship

can be assigned the following values which were derived from the results of large-scale earth-pressure tests (Terzaghi, 1934) :

Relative density	Loose	Medium	Dense
Dry or moist sand, value of l'_h (tons ft^{-3})	125	200	300
Submerged sand, value of l'_h (tons ft^{-3})	75	120	180

If the lowest part of the sheet piles of the bulkhead shown in Fig. 7(a) moves to the left with reference to its original position, the corresponding value of the constant of horizontal subgrade reaction is even greater than l'_h, because the contact pressure acts only on a narrow strip. Hence, if it is assumed that $l_h = l'_h$, the computed displacements will be greater than the real ones.

If the sheet piles have been driven into heavily precompressed clay :

$$k_h = k_{h1}\frac{1}{D} \qquad \ldots\ldots\ldots\ldots \quad [14]$$

A procedure for estimating the value of k_{h1} is illustrated by Fig. 11. It represents a vertical section through a bulkhead driven to depth D into stiff clay, with surface ac. The clay is assumed to be weightless. On this assumption it makes no difference whether the loaded area ab is vertical or horizontal. The sheet piles ab are moved through a distance y to the right.

If the space above ac were also filled with weightless clay, acted upon over width ab' by

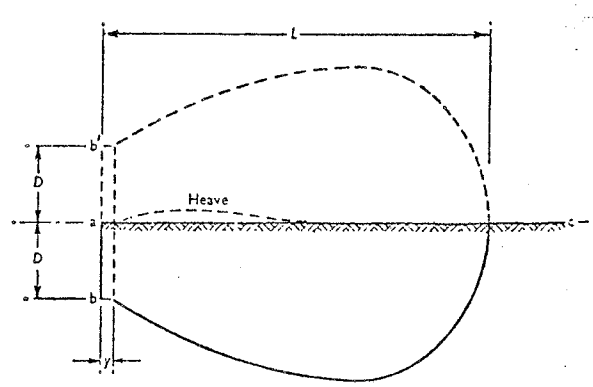

Fig. 11. Diagram illustrating influence of heave of free clay surface on horizontal displacement of vertical wall with height D on intensity of contact pressure

an advancing strip, the bulb of pressure would assume the shape shown in the figure and the coefficient of subgrade reaction would be :

$$k_h = k_{s1} \frac{1}{2D}$$

wherein k_{s1} is the coefficient of subgrade reaction for a strip with width 1 ft, resting on clay (Table 2). During the advancement of bb′, the surface ac would remain plane.

In reality the space above ac is empty and an advance of ab to the right causes the surface ac to bulge in an upward direction as shown in Fig. 11. Therefore, the horizontal pressure required to produce the displacement y of ab against the mass with horizontal surface bc is somewhat smaller than that required to move bb′ through distance y and the corresponding coefficient of subgrade reaction is smaller. On account of this fact it is proposed to assign to k_h the value :

$$k_h = k_{s1} \frac{1}{3D} = \frac{1}{3} k_{s1} \frac{1}{D} \quad . \quad . \quad . \quad . \quad . \quad . \quad . \quad . \quad . \quad (21)$$

If the sheet piles were driven into stiff clay, Fig. 7(c), the value k_h for the clay located between the dredge line and depth D' is obtained by replacing D in equation (21) by D' :

$$k_h = \frac{1}{3} k_{s1} \frac{1}{D'}.$$

Below depth D' the coefficient is equal to that for a loaded strip with width D'' on the horizontal surface of stiff clay :

$$k_h = k_{s1} \frac{1}{D''}$$

For vertical diaphragms embedded in sand fills, Fig. 8, the values of l_h, Table 4, should be multiplied, as indicated by equation (18), with reduction factor 0·4, because the surface of the sand in contact with the diaphragm slopes away from the crest of the diaphragm, and, as a consequence, its coefficient of subgrade reaction k_d is smaller than that of a sand stratum with a horizontal surface, everything else being equal. Therefore :

$$k_d = 0{\cdot}4\, l_h \frac{z}{H}$$

wherein, H is the height of the sand embankment.

Conversion to other units

The values of coefficients of subgrade reaction are commonly given in kilogrammes and centimetres, metric tons and metres, tons and feet or pounds and inches. The conversion of one system into another can be performed by means of the following conversion-factors :

1 kg cm^{-2} =	10 *tons$_m$ m^{-2} =	1·03 †tons ft^{-2} =	14·2 lb in.$^{-2}$
1 kg cm^{-3} =	1,000 tons$_m$ m^{-3} =	31·3 tons ft^{-3} =	36·1 lb in.$^{-3}$
1 kg cm^{-4} =	100,000 tons$_m$ m^{-4} =	950 tons ft^{-4} =	91·2 lb in.$^{-4}$

* ton$_m$ = 1,000 kg.
† ton = 2,000 lb.

In this Paper (Terzaghi 1934) all the numerical values were given in tons and feet.

In connexion with the conversion of numerical data into another unit system, it must always be remembered that the values of k and m are not subgrade constants. They are

values referring to the subgrade acted upon by a unit load or a unit pressure over an area with specified dimensions. The following example illustrates the procedure for taking this fact into consideration.

Loos and Breth (1949) obtained from horizontal loading tests on a hollow steel pile with a diameter of 0·062 metres = 0·2 ft, embedded in dry, compacted sand the value:

$$m_h = 30{,}000 \text{ tons m}^{-4} = \frac{950}{100{,}000} \cdot 30{,}000 = 285 \text{ tons ft}^{-4}$$

The corresponding value n_h, equation (19) and Table 3, is equal to:

$$n_h = m_h B$$

wherein B is the width of the strip-shaped contact area. Since $B = 0{\cdot}2$ ft

$$n_h = 58 \text{ tons ft}^{-3}$$

This value is slightly higher than the average value of 56 tons ft^{-3} for dense sand, given in the Table. It is interesting to remember that the Table values have not been derived from pile tests. They were computed by means of the theory of elasticity on the basis of what is known about the elastic properties of sand.

CORRECTIONS FOR THE ERRORS INVOLVED IN THE FUNDAMENTAL ASSUMPTIONS

Under the sub-heading "Fundamental assumptions" (p. 301) it is stated that the theories of subgrade reaction are based on two simplifying assumptions: (A) The coefficient of subgrade reaction k is, at every point, independent of the contact pressure p, and (B) The coefficients k_s for any subgrade, k_h for stiff clay and m_h for sand have the same value at every point of the contact face. Both assumptions involve crude approximations as shown below.

In Fig. 12, showing the relation between subgrade reaction p (abscissas) and corresponding settlement y (ordinates), assumption (A) is represented by a straight line OA through the origin O. Yet if a loading test is performed on a subgrade of any kind it will be found that the settlement y increases with increasing pressure p, as shown by curve C which approaches a vertical tangent. On account of the relationships represented by the diagram, assumption (A) is approximately valid only for values of p which are smaller than about one-half of the ultimate bearing capacity p_u. For stiff clay the value of p_u is practically independent of the size of the loaded area, whereas for sand it increases with increasing size. In connexion with problems involving coefficients of subgrade reaction these limits of the validity of assumption (A) should always be taken into consideration.

Hayashi (1921) and Freund (1927) have solved various problems involving vertical subgrade reaction on the assumption that the value k_s decreases with increasing pressure p, as it does according to curve C in Fig. 12. However, the practical value of these solutions is doubtful, because the errors due to assumption (A) represented by the difference between line OA and curve C in Fig. 12 within the range of pressure zero to $p_u/2$ are commonly unimportant compared to those due to assumption (B).

For loaded beams on a perfectly elastic subgrade, Biot (1937) has shown that the coefficient of subgrade reaction depends not only on the width of the beam, but also to some extent on the flexural rigidity of the beam. He derived equations which make it possible to take this influence into consideration, provided the nature of the problem justifies such a refinement.

According to assumption (B) the subgrade reaction p on the base of a centrally loaded perfectly rigid beam or slab has the same value p_1 everywhere as indicated in Figs 13(a) to 13(d) by rectangular areas with height p_1. In reality the pressure p at the rim of the surface of contact is either greater or smaller than at the centre, depending on the elastic properties of the subgrade. In Fig. 13(a) the plain curve represents the pressure distribution on the base of a rigid beam resting on stiff clay. In a similar manner the real pressure distribution

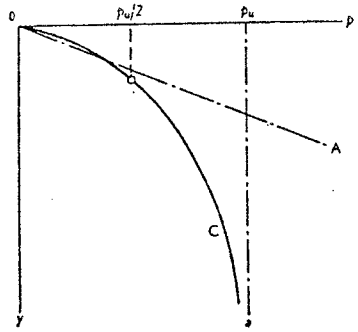

Fig. 12. Relation between subgrade reaction p and displacement y: Line OA assumed and curve OC real relationship

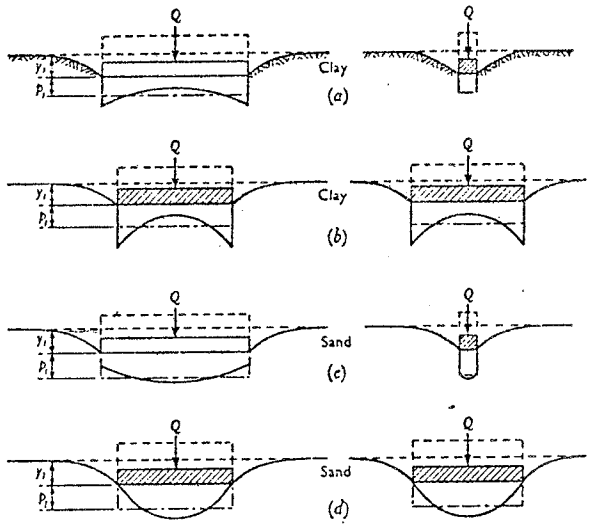

Fig. 13. Difference between theoretical distribution of subgrade reaction on the base of rigid beams (*a*) and (*c*), and rigid slabs (*b*) and (*d*), represented by dash-dot lines, and the real distribution (plain lines)

is shown in Fig. 13(b) for a rigid circular plate resting on stiff clay, in Fig. 13(c) for a rigid beam on cohesionless sand, and in Fig. 13(d) for a rigid circular slab on sand.

The difference between the uniform and the real pressure distribution in Figs 13(a) to 13(d) represents the error associated with assumption (B). If the subgrade consists of stiff clay the real bending moments beneath the points or lines of load application are somewhat greater than those computed on the basis of assumption (B) and if the subgrade consists of sand, they are smaller. This conclusion applies to both rigid and flexible beams and slabs on the surface of the ground.

For flexible beams and plates resting on a perfectly elastic subgrade, rigorous or semi-rigorous methods of computing the bending moments can be obtained on the basis of the theory of elasticity. This has been done for uniformly loaded strips and circular footings by Borovicka (1936), and for beams by Habel (1938), who derived approximate equations for the contact pressure on the base of elastic beams which transmit an arbitrary system of loads on to the surface of a semi-infinite, elastic solid. Similar investigations have been carried out by De Beer (1948) and De Beer and Krasmanovitch (1952). Schultze (1953) discussed the problem of computing the stresses in loaded concrete mats on an elastic subbase. The literature dealing with this subject is still expanding.

In connexion with practical problems, the errors resulting from assumption (B) can in many cases be disregarded. If it is doubtful whether or not the errors are inconsequential, a correction can be made on the basis of our general knowledge concerning the distribution of the real soil reaction on the base of beams, rafts, and buildings, resting on the subgrade under consideration. For this purpose a diagram is constructed which shows approximately the real distribution of the contact pressure on the base of the load-supporting structure. Then the general component of bending moments are computed which would develop in the structure, if all the loads acting in any portion of the structure were uniformly distributed in that portion over the top surface of the members acted upon by the loads, and these bending moments are added to the local moments computed by means of the theory of subgrade reaction.

The theories of horizontal subgrade reaction are based on assumptions similar to assumptions (A) and (B) in the theories of vertical subgrade reaction.

According to assumption (A) the horizontal displacement of a vertical contact face should increase in simple proportion to the horizontal pressure p, as shown by a straight line in Fig. 12. In reality it increases with increasing pressure in the manner indicated by curve C.

The errors associated with assumption (B) are different for different subgrades. For instance, if the subgrade consists of stiff clay, it is assumed that :

$$k_h = \frac{p}{y} = \text{constant},$$

because the modulus of elasticity of stiff clay is practically independent of depth. Hence, if

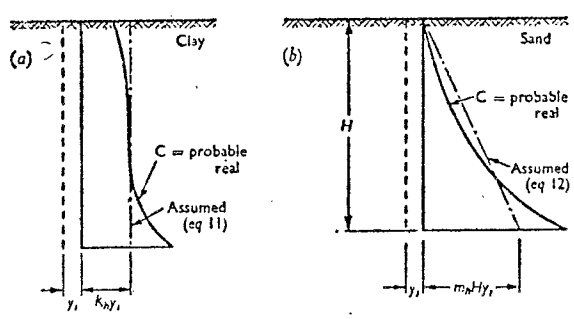

Fig. 14. Difference between theoretical and probable real pressure distribution over face of rigid, vertical, buried plate, advancing parallel to its original position

a rigid vertical plate, Fig. 14(a), embedded in stiff clay, is advanced over a horizontal distance y_1 the corresponding subgrade reaction p_1 should be independent of depth, as indicated in Fig. 14(a) by a rectangle with width p_1. In reality the subgrade reaction is, at the lower edge of the plate, greater than it is at the upper end, as indicated by curve C.

If the subgrade consists of clean sand it is assumed that :

$$k_h = \frac{p}{y} = m_h z = \text{constant} \cdot z$$

because the modulus of elasticity of clean sand increases approximately in simple proportion to depth. Hence, if a vertical, rectangular, rigid plate embedded in sand is advanced through a horizontal distance y_1 the subgrade reaction should increase in simple proportion to depth as indicated in Fig. 14(b) by a triangular area. In reality the subgrade reaction on the upper part of the plate is smaller and on the lower one greater than the preceding equation calls for, as indicated in Fig. 14(b) by curve C. Yet the errors in the computation of stresses in foundations and sheet piles due to these discrepancies are not important enough to require correction.

CONCLUSIONS

(1) Both private and published opinions concerning the influence of the dimensions of the area acted upon by the subgrade reaction on the value of the coefficient of subgrade reaction vary widely, and in many instances the existence of this influence has been ignored. Therefore, the errors involved in the application of the theory of subgrade reaction to the solution of engineering problems have often been very great.

(2) This Paper contains rules for adapting the values of the coefficient of subgrade reaction to the elastic properties of the subgrade and to the dimensions of the area acted upon by the subgrade reaction. If the numerical values of the coefficients are selected in accordance with these rules, the results of the computation of stresses and bending moments in footings or mats can be considered reasonably reliable. However, the theories of subgrade reaction should not be used for the purpose of estimating settlement or displacements.

(3) Refinements in the evaluation of the coefficients of subgrade reaction are seldom justified, because the errors in the results of the computations are very small compared to those involved in the estimate of the numerical values of the coefficients of subgrade reaction.

(4) At the present state of our knowledge the greatest uncertainties prevail in connexion with the values K'_0 and l_h which appear in the equations for the coefficients of horizontal subgrade reaction for anchored bulkheads and flexible diaphragms in earth dams. More reliable information concerning these values could be obtained by investigating the relationship between the horizontal displacement of rigid, vertical walls advancing against sand with different relative density and the corresponding contact pressure.

(5) The fundamental equations of the theories of subgrade reaction have been obtained by a radical simplification of the real relations between contact pressure and corresponding displacement. However, under normal conditions the errors due to these simplifications are adequately taken care of by the customary factor of safety in design, provided the coefficients of subgrade reaction have been assigned numerical values which are compatible with both the elastic properties of the subgrade and the dimensions of the area acted upon by the subgrade reaction. If necessary, the error can be reduced considerably, as shown in the last part of this Paper.

ACKNOWLEDGEMENTS

The Author wishes to express his gratitude to Messrs L. Casagrande, N. M. Newmark, R. B. Peck, and F. E. Richart, Jr., for their valuable comments and suggestions during the preparation of this Paper.

REFERENCES

BAUMANN, P., 1935. Analysis of Sheet-Pile Bulkheads. *Trans. Amer. Soc. Civ. Engrs.* Paper No. 1908, 100 : 707.

BIOT, A. M., 1937. Bending of an Infinite Beam on an Elastic Foundation. *J. Appl. Mechanics*, 4 : 1 : A1–A7.

BLUM, H., 1951. Beitrag zur Berechnung von Bohlwerken (Retaining Walls Calculation). *Wilh. Ernst, Berlin.*

BOROWICKA, H., 1936. Influence of Rigidity of a Circular Foundation Slab on the Distribution of Pressures over the Contact Surface. *Proc. Int. Conf. Soil Mech.*, Cambridge, Mass., 1 : 144.

CUMMINGS, A. E., 1937. Lateral Pile-Loading Tests. *Discussion Trans. Amer. Soc. Civ. Engrs*, 102 : 255.

DE BEER, E. C., 1948. Calcul des poutres reposant sur le sol (Calculation of beams resting on the soil). *Annales des Travaux Publics de Belgique, Brussels*, 101 : 393–418 ; 101 : 525–552 ; 101 : 653–691 ; 101 : 721–749.

DE BEER, E. E., *and* KRASMANOVITCH, D., 1952. Calcul des poutres reposant sur le sol (Calculation of beams resting on the soil). *Annales des Travaux Publics de Belgique, Brussels*, 53 : 9–56.

ENGESSER, F., 1893. Zur Theorie des Baugrundes (The Theory of site foundations). *Zentralblatt der Bauverwaltung.*

FREUND, A., 1927. Erweiterte Theorie für die Berechnung von Schleusenböden und ähnlichen Gründungskörpern (Further theory on the calculation of weir foundations and similar works). *Zeitschrift für Bauwesen (Ingenieurbauteil)*, 77 : 73–88 and 108–120.

HABEL, A., 1938. Näherungsberechnung des auf dem elastischisotropen Halbraum aufliegenden elastischen Balkens (An approximate calculation of elastic beams in an elastic-isotropic hemisphere). *Der Bauingenieur*, 19 : 9.

HAYASHI, K., 1921. Theorie des Trägers auf elastischer Unterlage (Theory of beams on elastic foundation). *J. Springer, Berlin.*

HETÉNYI, M., 1946. Beams on Elastic Foundation. *Univ. Mich. Press.*

LÖFQUIST, B., 1951. Calculating a concrete core wall. *Fourth Congress on Large Dams, New Delhi*, 1 : 111.

LOOS, W., *and* BRETH, H., 1949. Modellversuche über Biegebeanspruchungen von Pfählen und Spundwänden (Model experiments on deflexion of piles and retaining walls). *Der Bauingenieur*, 24 : 264.

RIFAAT, T., 1935. Die Spundwand als Erddruckproblem (The sheet-piling wall as an earth pressure problem). *Leeman, Zurich.*

TERZAGHI, K., 1932*a*. Tragfähigkeit der Flachgründungen (Bearing capacity of shallow foundations). *Proc. First Cong. Int. Ass. Bridge & Struct. Eng.*, p. 659.

TERZAGHI, K., 1932*b*. Bodenpressung und Bettungsziffer (Soil pressures and soil coefficient). *Osterr. Bauzeitung*, No. 25.

TERZAGHI, K., 1934. Large retaining-wall tests. (1). Pressure of dry sand. *Eng. News Rec.*, 112 : 136.

TERZAGHI, K., 1943. Theoretical Soil Mechanics. *Wiley, New York.*

TERZAGHI, K., *and* PECK, R. B., 1948. Soil Mechanics in Engineering Practice. *Wiley, New York.*

WESTERGAARD, H. M., 1926. Stresses in Concrete Pavements Computed by Theoretical Analysis. *Publ. Rds*, 7 : 25.

WINCKLER, E., 1867. Die Lehre von Elastizität und Festigkeit (On elasticity and fixity). *Prague*, p. 182.

ZIMMERMANN, H., 1888. Die Berechnung des Eisenbahn Oberbaues (The calculation of railway superstructures). *Berlin.*

The Secretary,
The Institution

DEAR SIR,

EXPERI

In the course o
Bjerrum and his co
of the Municipali
cofferdams was ob
Brothers (London)

The soil condit
The conditions are
and Ward (1952), o
of soft clay (inters
lies directly on the

The sheet-pile c
in dimensions. Th
under four heading

(1) *Ash-plant co*
chalk. A high d
than anticipated.
The tops of the p

In the course
the tops of the s
area lifted. A
cofferdam is 61
red was about 6

An estimate
the basis of Ske
of the soft clay j
clay is about 115

which is the theo
clay of constant
and according to

(2) *Cofferdams fo*
mentioned subse